THE REVISION STATUS OF ALL SHEETS OF THIS DRAWING IS THE SAME AS SHEET 1

LTR	DESCRIPTION	DATE	BY
-	Released	5/22/96	JCL
A	Replaced Sketch	5/8/06	JCL

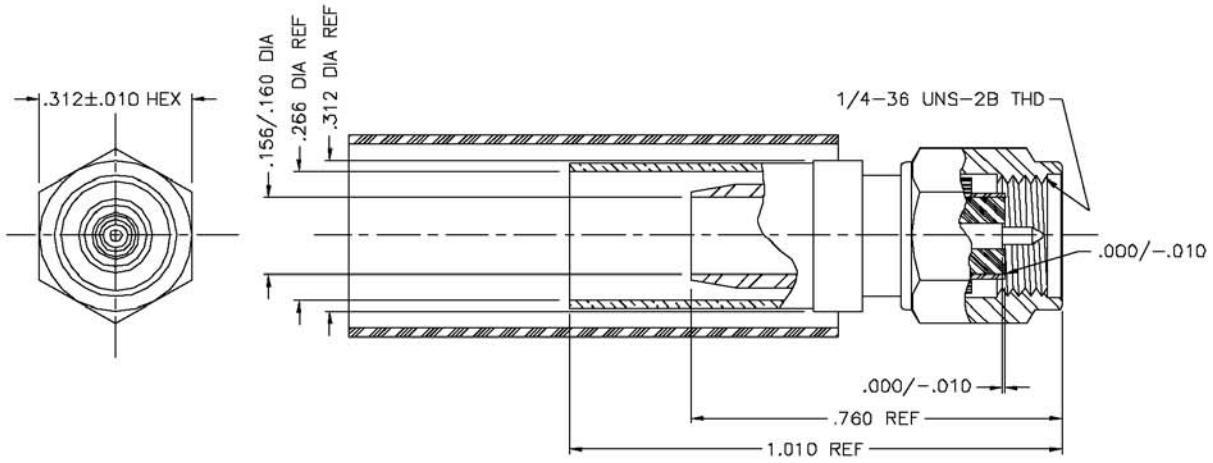

I. **MATERIALS & FINISHES**

center contact: Gold Plated Beryllium Copper
outer contact: Stainless Steel
body: Stainless Steel
crimp sleeve: NickelPlated Copper
dielectric: Teflon® PTFE
gasket: Silicone Rubber
shrink sleeve: Adhesive Lined Polyolefin
attachment: braid crimp

II. **ELECTRICAL PROPERTIES**

impedance: 50 ohms
working voltage: 375 vrms (max)
vswr: 1.25:1 (max) up to 2.5 GHz
insertion loss: 0.10 x √Fghz

Unless otherwise specified, dimensions are in inches. Tolerances are applicable when specified.

These drawings and specifications contain proprietary information which is the property of Times Microwave Systems.

Approvals		
Drawn	JCL	5/22/96

TIMES MICROWAVE SYSTEMS
Wallingford, CT 06492
(203) 949-8400; (203) 949-8423.Fax
www.timesmicrowave.com

TC-240-SM
Type-SMA male (plug)
for LMR-240 Cable

Size	CAGE CODE	Drawing No.:
A	**68999**	**3190-380**

Scale: NA	Rev. (A)	Sheet: 1 of 1